Venezia Wall Hung Monoblock Washbasin

Product code: 1083-001-0125

Collection	Venezia
Size	465 X 535
Brand	BOCCHI
Surface	Glazed Hygiene
Colour	Glossy White
Class	CL 00
Weight	29,56 kg
Accessory	Ceramic pop-up cover 1219-001-0120
	POP-UP 6190 - 0001
	Mounting set A0054

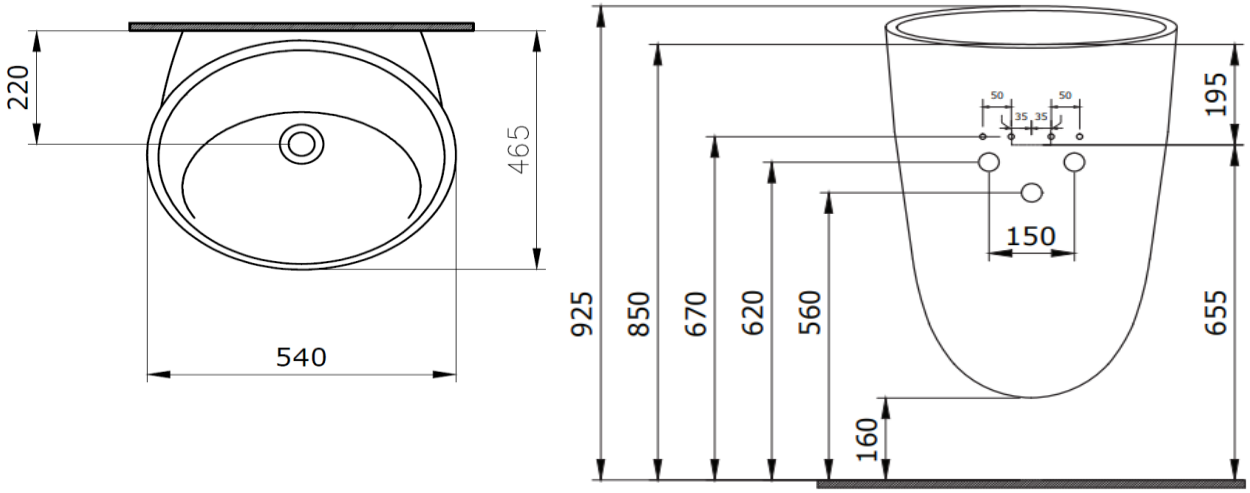

BOCCHI reserves the right to make changes in products and technical details without notice.
All dimensions in the drawings are within standard tolerances.
If there is a need for exact measurements in assembly applications, exact measurements taken from the product should be used.